E-ISSN: 2321–9637
Volume 2, Issue 1, January 2014
International Journal of Research in Advent Technology
Available Online at: http://www.ijrat.org

ARM7 BASED PATIENT'S HEALTH MONITORING SYSTEM

Jayant Mankar[1], Jayshri Bhute[2] , Nikita Thool[3], Pranali Rasnala[4], Komal Handa[5]
[1]*Asst. Professor, Electronics Engg., Smt. Rajshree Mulak College of Engg. For Women, Nagpur, India*
[2-3]*Students, Electonics Engg., Smt. Rajshree Mulak College of Engg. For Women, Nagpur, India*
[1]*Email- sushjay@rediffmail.com*
[2] Email- Bhutejayshri19@gmail.com
[3]Email- pranalirasnala18@gmail.com

***ABSTRACT*: Recent advances in wireless communications have set the track for a new paradigm of personalized healthcare based on persistent continuous vital sign data collection and real-time processing of monitored data to derive meaningful physiological parameters. Care of critically ill patient requires prompt & accurate decisions so that life-protecting & life saving therapy can be properly applied. Because of these requirements, ICUs have become widely established in hospitals. Difficulty found in most hospitals is that Expert has to frequently visit the patient & asses his/her condition by measuring different parameters. These systems works when there is any emergency by using different wireless technologies. This paper is mainly based on continuous monitoring aspect of ICU patients. We have, developed a reliable, energy efficient patient monitoring system. It is able to send parameters of patient in real time. It enables the doctors to monitor patients parameters (temp, heartbeat , ECG) in real time using http protocol The timely manner of conveying real time monitored parameter to doctor is given highest priority. Hence On line Real time Health monitoring is becoming popular for the ICU patients**.

Keywords: Sensors, GSM modem, ZIGBEE, ARM7 processor, patient's monitoring, Wireless Biomedical sensor network (WBSN)

I. INTRODUCTION

Patient Monitoring Systems play a vital role in the monitoring of patients in Intensive Care Units (ICU) and other in-patient wards in hospitals, providing continuous data acquisitions, analysis, interpretation and display of the patient's vital functions. The rapid evolution of Information of Communication Technology (ICT) is resulting in more powerful monitoring systems capable of complex bio-signal processing, interpretation and display [1]. Currently there are number of health monitoring systems available for the ICU patients. All these systems works mainly when there is any emergency occurs. It means information is transmitted to server mainly when there is any abnormality occurs. But main problem with these systems is that it is not capable of transmitting data continuously also range limitations of different wireless technologies used in the systems.

In order to keep in track of critical health conditions, a real time health monitoring system of patient based on Zigbee, GSM, and SMS is designed and developed in this project. This finds vast application in the remote places where the people are out of reach from the experienced doctors; keeping this factor in mind best effort is done to implement some of the basic test of pathological data on the system[3][5]. Hence the entire project can be broadly divided into four sections firstly, the parameters measured from the patient and transmitted, secondly the signal processing and conversion to digital form; thirdly decision making with the help of an algorithm where they obtained signal values are compared with the standard values and finally the transmission of the condition of the patient to the doctor. In this project we are using different types of sensors i.e. Wireless Biomedical Sensor Network (WBSN)

WBSN can wirelessly monitor patients' physiological signal (electrocardiogram (ECG), temperature, heartbeat, etc) by individual node or pill that is worn, carried or swallowed by the patients. It then alerts the healthcare professionals with abnormally changes of patients' physiology condition, while delivering the data to a database system for the long-term storage. The data gathered by the sensor network can give important clues of that person's state of health.

II. PROPOSED SYSTEM

Projected system involves different sensors, ARM 7 microprocessor, GSM / GPRS UART modem .The sensors continuously sense the parameters of ICU patient & send to ARM 7 microprocessor. Processor converts

E-ISSN: 2321–9637
Volume 2, Issue 1, January 2014
International Journal of Research in Advent Technology
Available Online at: http://www.ijrat.org

these in to digital form and then these parameters are transmitted to server PC by establishing HTTP connection via GPRS (General Packet Radio Service)[11]

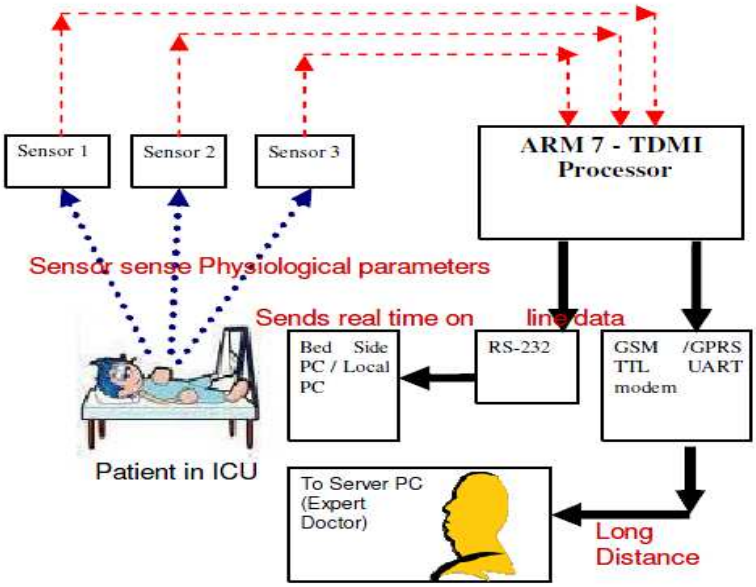

fig 1. Block diagram of real health monitoring system of patient using arm7

III. System Developed

The actual system is shown in figure. Here 3 sensors are designed, it uses temp, ECG, heart beat sensor. All the parameters are continuously sensed by sensors and then send to processor. It converts these parameters into digital form and then these parameters are send to modem and by establishing http communication (via GSM / GPRS) using AT commands transmitted to server PC .On server side we have developed VB.Net application which downloads all the data which is transmitted. And then display these parameters in the form of waveforms. [1] [3]

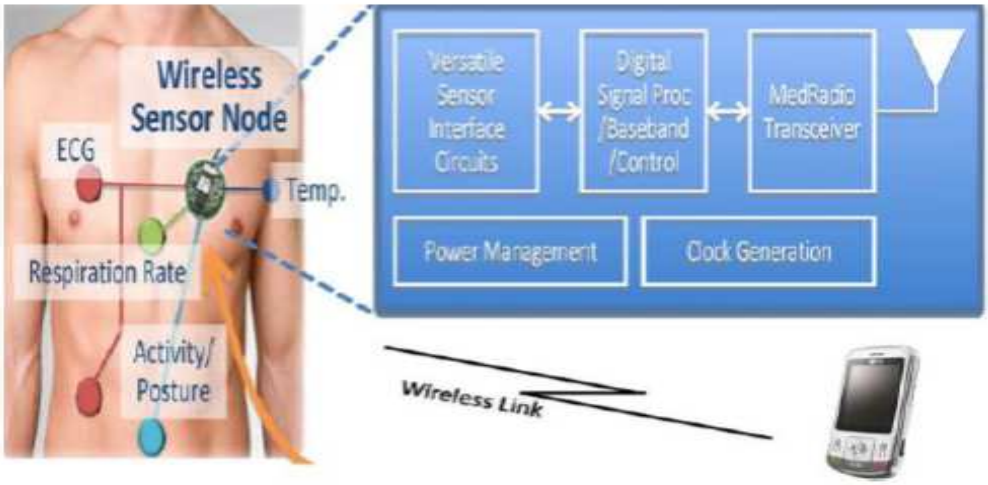

Fig.2. Connection of sensors to Human Body

A. System Designing.

The designing part includes basically three sections as follows,

1. ***HARDWARE DESIGN:*** It includes Power supply design, Temperature sensor, Heart beat sensor, Electrocardiograph sensor and RS-232 connector circuit.

The hardware of project requires different power supplies. **5 V** for temperature sensor circuit, heartbeat circuit, RS 232

E-ISSN: 2321–9637
Volume 2, Issue 1, January 2014
International Journal of Research in Advent Technology
Available Online at: http://www.ijrat.org

connector circuit. **3.3 V** for ARM 7 TDMI microprocessor. **± 9 V** for ECG sensor circuit

The LM35 series are precision integrated-circuit temperature sensors, whose output voltage is linearly proportional to the Celsius (Centigrade) temperature. The LM35 thus has an advantage over linear temperature sensors calibrated in °Kelvin, as the user is not required to subtract a large constant voltage from its output to obtain convenient Centigrade scaling. The LM35 does not require any external calibration or trimming to provide typical accuracies of ±1⁄4°C at room temperature and ±3⁄4°C over a full −55°C to +150°C temperature range. Low cost is assured by trimming and calibration at the wafer level. The LM35's low output impedance, linear output, and precise inherent calibration make interfacing to readout or control circuitry especially easy. It can be used with single power supplies, or with plus and minus supplies. As it draws only 60 µA from its supply, it has very low self-heating, less than 0.1°C in still air. The LM35 is rated to operate over a −55°C to +150°C temperature range, while the LM35C is rated for a −40° to +110°C range (−10°C with improved accuracy). The LM35 series is available packaged in hermetic TO-46 transistor packages, while the LM35C, LM35CA, and LM35D are also available in the plastic TO-92 transistor package. [6] [10]

For Heart Beat Sensor we are using IC LM 358.Its dual low power operational amplifier IC. It consists of a super bright red LED and light detector. LED needs to be super bright as the light must pass through finger and detected at other end. When heart pumps a pulse of blood through blood vessels, finger becomes slightly more opaque so less light reached at the detector. With each heart pulse detector signal varies this variation is converted to electrical pulse.[4] [5]

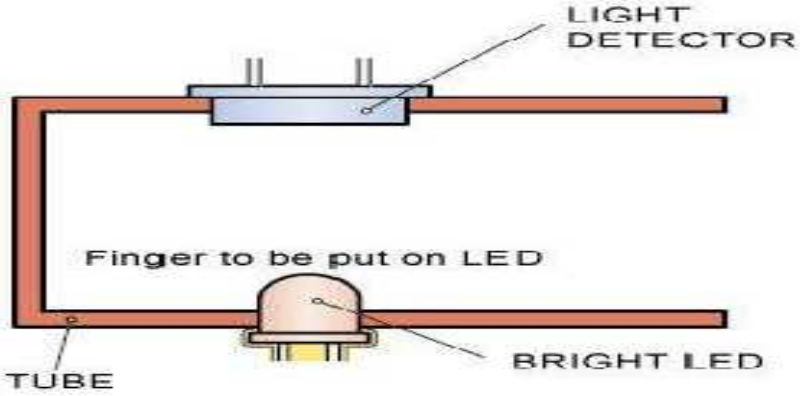

Fig 3. Heartbeat sensor

Electrocardiography (ECG) is a mean by which the electrical potential generated during the cardiac cycle can be a graphical record [E. Norris and V. Nahas (1989)]. Some of critical diseases which can be detected through ECG signal are ischemic heart disease, cardiac arrhythmias, heart failure and etc. In this paper, 3-lead ECG signal generated by a patient simulator is used to be the input physiological signal and transmitted using TRG mote. This patient simulator, as shown in Fig. 4, is also capable of generating other physiological signals such as blood pressure, pulse rate, oxygen saturation in blood and etc.[12][23]

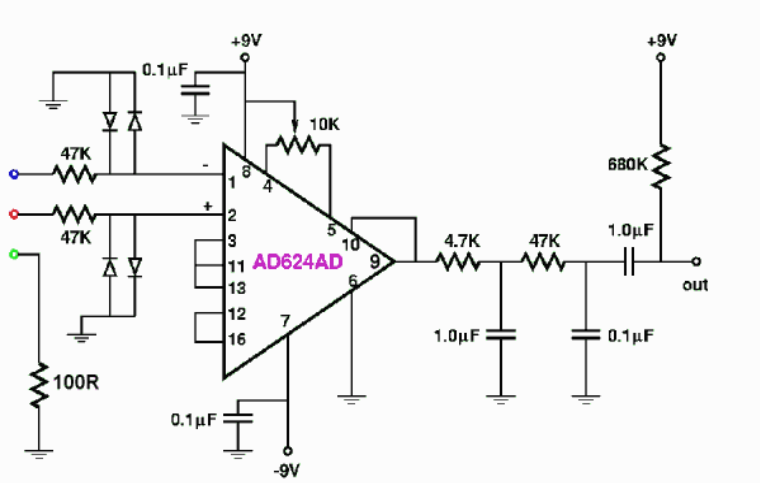

Fig 4. ECG Sensor

E-ISSN: 2321–9637
Volume 2, Issue 1, January 2014
International Journal of Research in Advent Technology
Available Online at: http://www.ijrat.org

The wireless sensor nodes are connected to A/D converter in which the analog input signal is converted into digital signal andthe output is given to the microcontroller, as the peripheral devices are connected we are using microcontroller & the signal is transmitted.[13]

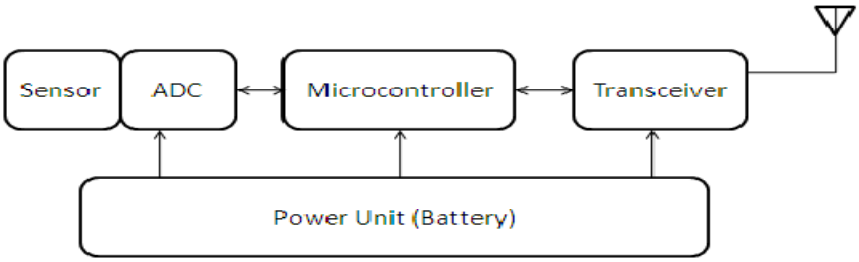

Fig 5. Wireless sensor node

The ARM7 is a low-power, general purpose 32-bit RISC microprocessor macrocell for use in application or customer-specific integrated circuits (ASICs or CSICs). It's simple, elegant and fully static design is particularly suitable for cost and power-sensitive applications. The ARM7's small die size makes it ideal for integrating into a larger custom chip that could also contain RAM, ROM, logic, DSP and other cells.[23][22]

Feature of ARM7:

- 32-bit RISC processor (32-bit data & address bus)
- Big and Little Endean operating modes
- High performance RISC
- Low power consumption
- Fully static operation
- Fast interrupt response
- Virtual Memory System Support
- Excellent high-level language support
- Simple but powerful instruction set

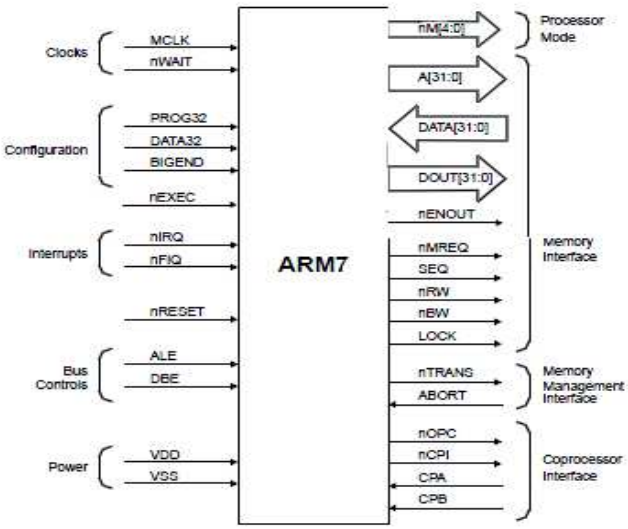

Fig.6. Pin diagram of arm7

E-ISSN: 2321–9637
Volume 2, Issue 1, January 2014
International Journal of Research in Advent Technology
Available Online at: http://www.ijrat.org

RS 232 Connector is a serial port connector. It is used to connect the hardware to the modem. It is used to send the sensed parameters from patient to the modem, which then transmits all the parameters to the server PC via http protocol via GPRS. Another RS 232 connector is used to download the code into processor.[1][6]

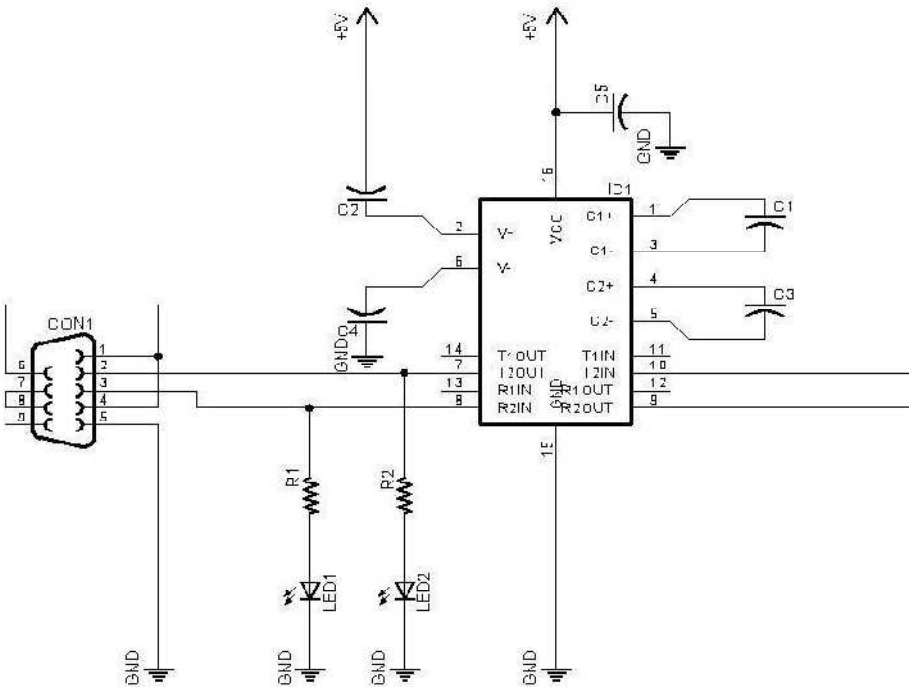

Fig.7 Circuit Diagram of RS232 connector

GSM/GPRS UART modem is built with Quad Band GSM/GPRS engine, works on 850 /900/ 1800/ 1900 MHz. Frequency band can be set by AT commands. The Modem is coming with RS232 interface, which allows to connect PC as well as microcontroller with MAX232. The baud rate is configurable from 9600-115200 through AT command. Modem is having internal TCP/IP stack to enable to connect with internet via GPRS. It is suitable for SMS, Voice as well as DATA transfer application in M2M interface. Using this modem, we can make audio calls, SMS, Read SMS; attend the incoming calls and internet through simple AT commands. This module connects to specific application and air interface. It is integrated with HTTP protocol. AT commands are developed to use HTTP protocol easily which will be very useful for those data transfer applications.

Fig.8 Sim 900 module

2. *SOFTWARE DESIGN:* This includes the coding of ARM 7 processor and coding for downloading of data and for GUI (Graphical User Interface) on server side. The software requirements are AT+ commands for HTTP, Embedded C using Keil software for ARM 7 & VB.NET for GUI.

For http communication establishment and for data transfer I am using AT commands. These are used in coding of ARM 7 processor. HTTP stands for **Hypertext Transfer Protocol**. It is a TCP/IP based communication protocol which is used to deliver virtually all files and other data, collectively called resources, on the World Wide Web. A browser works as an HTTP client because it sends requests to an HTTP server which is called Web server. The Web Server then sends responses back to the client. It is the protocol used for the web. It is

E-ISSN: 2321–9637
Volume 2, Issue 1, January 2014
International Journal of Research in Advent Technology
Available Online at: http://www.ijrat.org

based on a request/request paradigm.SIM900 has an embedded TCP/IP stack that is driven by AT commands and enables the host application to easily access the Internet HTTP service. [22][9]

A GUI platform was successfully developed using Visual Basic 6.0 programming that is able to interact with the hardware. fig. 9 shows the GUI designed for this project. It is divided into 5 main display panels which are for; ECG data in hexadecimal format (1), diagnosis (2), data analysis (3), plot of ECG signal [4] and basic patient information [5]

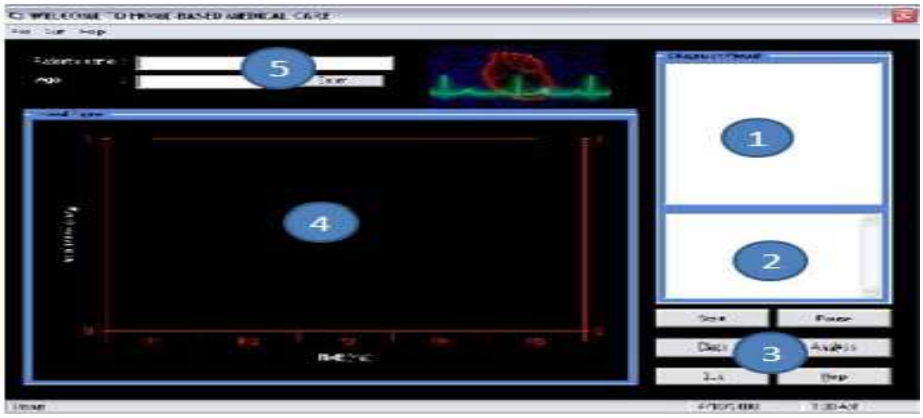

fig. 9 Graphical user interfaces

IV. Results

The result of this project includes results of compilation, sensors and GUI. The compilation of C code is done using Micro Vision Keil software and indicated the generation of Hex file. The sensor results are generated at different conditions like normal, after running, after wake up etc.

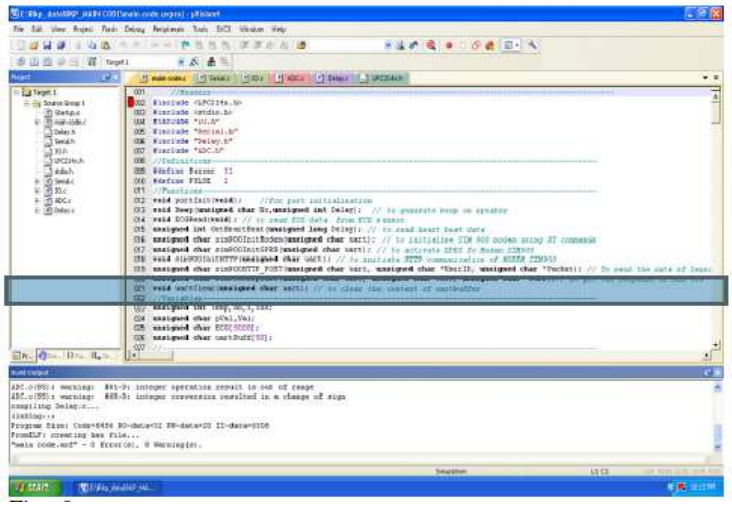

fig. 10.a Results of ARM7 code compilation

E-ISSN: 2321–9637
Volume 2, Issue 1, January 2014
International Journal of Research in Advent Technology
Available Online at: http://www.ijrat.org

fig. 10.b Result of Temp & HB Sensors

V. FUTURE SCOPE

There is always chance to improve any system as research & development is an endless process. Our system is no exception to this phenomenon. The system can be modified for measurement of Blood pressure, Pulse oximetry, Galvanic-Skin Resistance,

Anemia and WEBCAM technology can visualize patient situations. We can design a system which works in two ways, that means when the expert receives the data in the form of waveform, after observing these waveforms the expert will suggest or prescribe the drug for that situation or condition of patient.

VI. CONCLUSION

Many hospitals and physicians have requirements for an integrated and reliable wireless monitoring system to observe real time physiological signals from patients outside the hospital with high and reliable accuracy. Currently available systems for monitoring physiological signals suffer from technical limitations, resulting in the under exploitation of potentially life-saving data from this project I can conclude that we are able to transmit the data which is sensed from ICU patient to the server PC by establishing http communication to server via GPRS .The data is transmitted to server in real time, but if there is any network error or GPRS error then the data transmission might be get delayed. We can also check the data transmission and data downloading status on hyper terminal. So that we can remove the error if any. The leads of the ECG, heartbeat ,temperature sensor must be stick properly to the patient, So that we get accurate readings

REFERENCES

[1] K. Wang, I. Kohane, K. L. Bradshaw, and J. Fackler, A real-time patient monitoring system on the WWW. [Online]. Available: http://www.emrs.org/publications/amia_icu.html, 1996

[2] P. R. Norris, B. M. Dawant, and A. Geissbuhler., Web-based integration and annotation in the intensive care unit. [Online]. Available: http://simon.project.vanderbilt.edu/pub/amia97, 1997

[3] Péter Várady, Zoltán Benyó, and Balázs Benyó, An Open Architecture Patient Monitoring System Using Standard Technologies, IEEE transactions on information technology in biomedicine, vol. 6, no. 1, march 2002

[4] W. Walker, T. Polk, A. Hande, and D. Bhatia, Remote Blood Pressure Monitoring Using a Wireless Sensor, Sixth IEEE Annual Emerging Information Technology Conference Proceedings, Dallas, Texas, August, 2006.

[5] P. S. Pandian, K. P. Safeer, P. Gupta, D. T. Shakunthala, B. S. Sundersheshu and V. C. Padaki, Wireless Sensor Network for Wearable Physiological Monitoring, Journal Of Networks, Vol. 3, No. 5, May 2008

[6] Jongyoon Choi, Beena Ahmed and Ricardo Gutierrez-Osuna, Development and valuation of an Ambulatory Stress Monitor Based on Wearable Sensors, IEEE transactions on information technology in biomedicine, vol. 16, no. 2, March 2012

[7] DONG Jun, ZHANG Jia-wei1, ZHU Hong-hai1, WANG Li-ping, LIU Xia, LI Zhen-jiang, Wearable ECG Monitors and Its Remote Diagnosis Service Platform, IEEE Intelligent Systems, 2011

[8] R. Paradiso, G. Loriga, and N. Taccini, A Wearable Health Care System Based on Knitted Integrated Sensors, IEEE Transactions On Information Technology In Biomedicine, Vol. 9, No. 3, September 2005

[9] Dayu H (2010). The ZigBee Wireless Sensor Network in medical care applications. 2010 International Conference on Computer, Mechatronics, Control and Electronic Engineering (CMCE), pp. 497–500

[10] Jafari R, Encarnacao A, Zahoory A, Dabiri F, Noshadi H, Sarrafzadeh M (2005). Wireless Sensor Networks for Health Monitoring. Proceedings of the Second Annual IEEE International Conference

[11] Rifat Shahriyar, Md. Faizul Bari, Gourab Kundu, Sheikh Iqbal Ahamed, Md. Mostofa Akbar, Intelligent Mobile Health Monitoring System (IMHMS), International Journal of Control and Automation, vol.2, no.3, September 2009

[12] Xin Liu, Yuanjin Zheng, Myint Wai Phyu, F. N. Endru, V. Navaneethan, and Bin Zhao, An Ultra-Low Power ECG Acquisition and Monitoring ASIC System for WBAN Applications, IEEE Journal on Emerging and Selected Topics in Circuits and Systems, vol. 2, no. 1, March 2012
[13] Chris A. Otto, Emil Jovanov, and Aleksandar Milenkovic, A WBAN-based System for Health Monitoring at Home, 3rd IEEE/EMBS International Summer School On Medical Devices and BioSensors - ISSMDBS, 2006, pp 20-23
[14] Ahmed N. Abdalla, Muhammad Nubli, Tan Chien Siong, Fauzan Khairi, A. Noraziah, Enhancement of real-time multi-patient monitoring system based on wireless sensor networks, International Journal of Physical Sciences, vol. 6, no. 4, February, 2011
[15] C.D. Raut, V. G. Giripunje, The Real-Time Monitoring System for In-Patient Based on Biomedical Data Acquisition System, 2011 International Conference on Information and Network Technology,IACSIT Press, Singapore
[16] Remote and Wireless Patient Monitoring Markets [Online], Publication ID: KLI3948934, http://www.kaloramainformation.com/Remote-Wireless- Patient-7043770/, July 2012
[18] Lymberis,(2005)" Progress in R&D on Wearable and Implantable Biomedical Sensors for Better Healthcare and Medicine", *Proceeding of the 3rd Annual International IEEE EMBS Special Topic Conference on Microtechnologies in Medicine and Biology*. 296-298.
[19] Loren Schwiebert,Sandeep Ks Gupta and Jennifer Weinmann,(2001) "Research Challenges in Wireless Networks of Biomedical Sensor", *7th Annual International Conference on Mobile Computing and Networking. 151-165.*
[20] M. Blount (2007), "Remote health-care monitoring using Personal Care Connect", *IBM System Journal*, Vol 46, No 1.
[21] Neuman, M.R. and Liu, C.-C (1988), "Biomedical Sensors in Interventional Systems: Present Problems and Future Strategies", *Proceeding Of The IEEE*. 1218-1225.
[22] David Malan, Thaddeus Fulford-Jones, Matt Welsh and Steve Moulton(2004), "CodeBlue: AN Ad Hoc Sensor Network Infrastructure for Emergency Medical Care", *Proceedings of the MobiSys 2004 Workshop on Applications of Mobile Embedded Systems.*
[23] Rozeha et al (a), "Design and Implementation of Wireless Biomedical Sensor Networks for ECG Home Health Monitoring", *1st International Conference on Electronic Design, Penang, Dec 1-3, 2008*